VIKING®

TECHNICAL DATA

WATER MOTOR ALARMS

The Viking Corporation, 210 N Industrial Park Drive, Hastings MI 49058
Telephone: 269-945-9501 Technical Services: 877-384-5464 Fax: 269-818-1680 Email: techsvcs@vikingcorp.com

1. DESCRIPTION

The Viking water motor alarms are mechanical devices actuated by a flow of water. They are designed to sound a continuous alarm while a sprinkler system operates. An alarm is a required component of every sprinkler system having more than 20 sprinklers.

A. Features

1. The water motor alarms are tapped 3/4” NPT on the inlet and 1” NPT on the drain outlet.
2. The water motor alarm package includes a drive shaft 16-3/4” (425 mm) long for walls 14” (356 mm) thick or less. A special extension shaft is available for walls up to 30-1/4” (768 mm) thick.
3. The package also includes the required 3/4” (20 mm) NPT strainer for installation on the alarm line.
4. Rated water working pressure of Model F-2 is 250 PSI (17.2 bar).

B. Accessories: (order separately)

1. Extension Mounting Cup: Viking Part Number 05957B, Material: 14-Gauge Cold Rolled Steel, UNS-G10080, coated with black E-coat. The extension mounting cup is required when the wall thickness is less than 3” (76.2 mm). Refer to “INSTALLATION” instructions. See Figure 2.
2. Closure Plate: For use with Model F-2 only, Viking Part Number 05820B, Material: 16-Gauge Galvanized Steel, UNS-G10080. The closure plate is required when the Model F-2 Water Motor Alarm gong is mounted on an irregularly surfaced wall. It serves to prevent birds from entering the inside of the gong. The closure plate also serves as a mounting plate for sheet metal walls. Refer to “INSTALLATION” instructions. See Figure 2.
3. Special Extension Shaft: Viking Part Number 03312B, Material: Stainless Steel, UNS-S30400. The extension shaft is required when the F-2 or G-2 Water Motor Alarm is installed on walls from 14” (356 mm) to 30-1/4” (768 mm) thick.

2. LISTINGS AND APPROVALS

Viking Technical Data may be found on The Viking Corporation’s Web site at http://www.vikinggroupinc.com. The Web site may include a more recent edition of this Technical Data Page.

Model F-2:

cULus Listed - VPLX

FM Approved - Water Motor Gongs

LPCB Approved

CE - Standard EN 12259-4, EC-certificate of conformity 1725-CPD-H0001

New York City Board of Standards and Appeals - Calendar No. 219-76-SA

Model G-2:

VdS

CE - Standard EN 12259-4, EC-certificate of conformity 1725-CPD-H0001
The 07862 and 07868 Water Motor Alarms Model F-2 and Model G-2 conform to the provision of EN12259-4 standard.
EN12259-4 approvals are provided by:FM Approvals Ltd. 1 Windsor Dials Windsor, Berkshire, UK. SL4 1 RS
Approval Certificate No. issued February 15, 2010.

3. TECHNICAL DATA

Specifications

Available since 1991
Shipping Weight: Model F-2: 11 lbs. (5.0 kg); Model G-2: 13 lbs. (5.9 kg)
Model F-2 Water working pressure: Rated to 300 psi (21 bar); Model G-2 Water working pressure: 175 psi (12 bar)

Material Standards (See Figure 3)

Viking E-coat Spec: SPF02 W01

Ordering Information

Model F-2, Viking Part No. 07862
Model G-2, Viking Part No. 07868

4. INSTALLATION

Locate the water motor on an exterior wall as close as practical to the valve being monitored for water flow. A 3/4” (20 mm) strainer (included) is required on the alarm line as close as possible to the alarm outlet of the valve being monitored for water flow (or outlet of the retard chamber, if used). The location must be easily accessible for cleaning.

TECHNICAL DATA

WATER MOTOR ALARMS

The Viking Corporation, 210 N Industrial Park Drive, Hastings MI 49058
Telephone: 269-945-9501 Technical Services: 877-384-5464 Fax: 269-818-1680 Email: techsvcs@vikingcorp.com

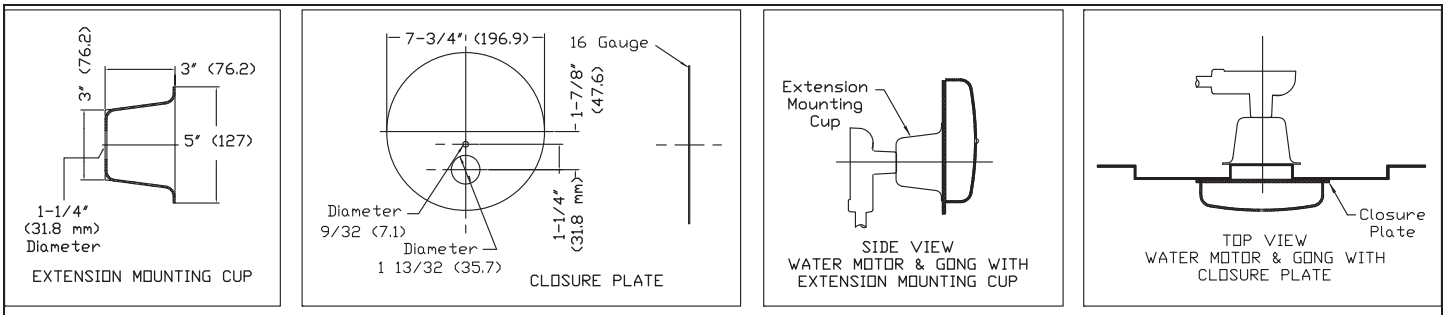

Figure 1: Accessories

A. Cut a 1-7/16" (36.5 mm) minimum to 1-5/8" (41.3 mm) maximum diameter hole in the building wall to accommodate the 3/4" (20 mm) galvanized spacer pipe. (Note: Spacer pipe is NOT included in Water Motor Alarm Package). The hole through the wall must be level or pitched slightly downward toward the water motor.
B. Measure the wall thickness.
C. Cut and thread the spacer pipe to a length equal to: The wall thickness minus 1" (25.4 mm). If the extension mounting cup is used, add an additional 3" (76 mm) to the spacer pipe.
D. Cut the drive shaft (10) to a length equal to: The total wall thickness plus 2-3/4" (70 mm). If extension mounting cup is used, add an additional 3" (76 mm).
E. File the drive shaft to provide a 3/32" (2.4 mm) x 450 chamfer on both corners of both ends. File off all burrs and insert the drive shaft into the hole of the striker arm shaft.
F. Slide the spacer pipe over the shaft and thread the end of the spacer pipe into the gong support assembly coupling (12).
G. Slide the closure plate (if used) over the free end of the spacer pipe, up to the back of the gong. If desired, the closure plate may be fastened to the gong support by using the 9/32" (7.14 mm) diameter hole in the gong support. Use only a flat or round headed fastener that will not interfere with striker arm movement.
H. Position the support assembly on the exterior wall surface by sliding the free threaded end of the spacer pipe into the hole from outside the building.
I. On the inside surface of the wall: Slide the wall plate provided (9), over the free threaded end of the spacer pipe. (If an extension mounting cup is used, place it over the end of the spacer pipe with the flared end toward the wall before sliding the wall plate into position).

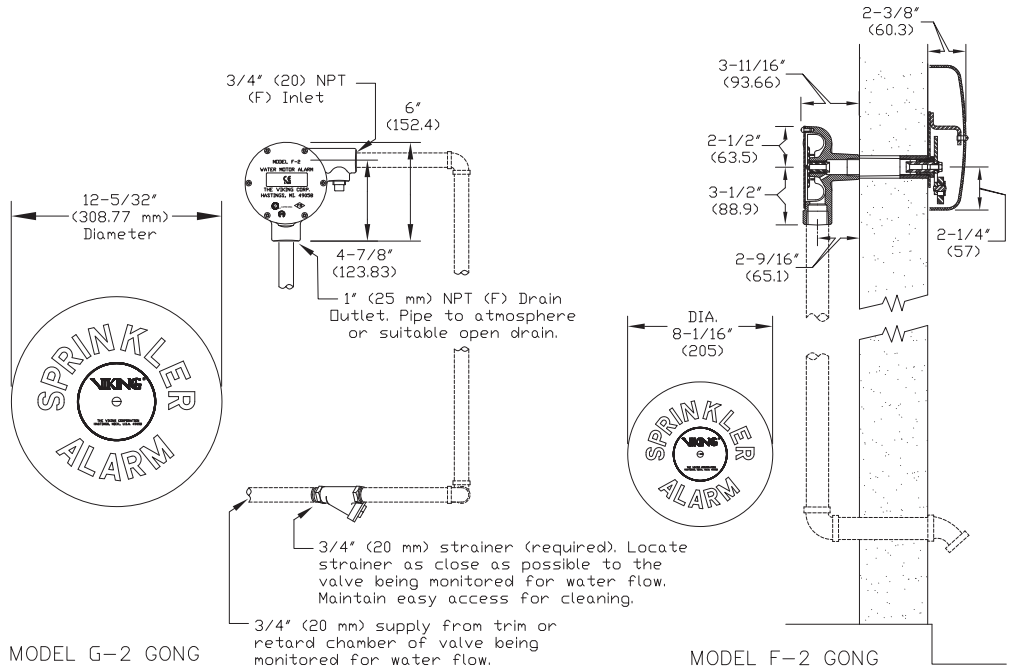

Figure 2

The Viking Corporation, 210 N Industrial Park Drive, Hastings MI 49058
Telephone: 269-945-9501 Technical Services: 877-384-5464 Fax: 269-818-1680 Email: techsvcs@vikingcorp.com

J. Remove the plastic thread protectors from the threaded openings in the body of the water motor.
K. Attach the water motor assembly by threading the body (3) onto the free threaded end of the spacer pipe. The chamfered ends of the drive shaft allow it to slide into position as the water motor body is threaded onto the spacer pipe. When the assembly is properly tightened, the water motor should be positioned with the 1” (25 mm) NPT drain outlet facing downward and the 3/4” (20 mm) NPT alarm line inlet horizontal. See Figures 1 and 3.
L. Attach the gong, the flat washer, and the gong label (16, 17, and 18) to the gong support installed on the exterior surface of the wall, with the 5/16-18 x 12” (13 mm) screw (19). Note: The flat washer must be installed between the gong and the gong support (17).
M. With galvanized, brass, or other approved corrosion-resistant piping, not less than 3/4” (20 mm) diameter, connect the water motor inlet to the alarm outlet of the waterflow detecting device. A 3/4” (20 mm) strainer (included) is required on the alarm line as close as possible to the alarm outlet of the waterflow detecting device (or outlet of the retard chamber if used). The location must be easily accessible for cleaning.
N. The drain outlet of the impeller housing must discharge to an open drain. Care shall be taken to keep the drain line clean at all times.
O. Note: A water motor drain line that:
   1. Has too many fittings, and/or
   2. Has a very short length of pipe between the 1” (25 mm) outlet and the first elbow in the water motor drain pipe, and/or
   3. Is very long may result in slow drainage and reduced water motor speed. This condition can be remedied by increasing the drain pipe diameter, increasing the length of pipe to the first elbow, and/or pitching the pipe toward the discharge location.

5. OPERATION (See Figure 3)

When a sprinkler system is activated, water flows from the alarm outlet of the valve, through the 3/4” (20 mm) strainer and alarm line piping, into the inlet of the water motor. From the 1/8” inlet orifice, the water flows through a nozzle (4), which restricts the flow into a pressurized stream directed onto the impeller (7). Force from the water stream turns the impeller and drive shaft (10), causing the striker arm (20) to rotate. The striker (25) impacts against the gong (16), producing a continuous alarm. A minimum of 5 PSI (.34 bar) is required at the nozzle to cause a continuous alarm. When properly installed, the Model F-2 Water Motor Alarm produces the required 90 decibel output and the Model G-2 produces 100 decibels. After passing through the water motor, the water is discharged through a 1” (25 mm) drain outlet in the bottom of the impeller housing. The discharged water must be piped through the wall to atmosphere or to a suitable open drain.

6. INSPECTIONS, TESTS AND MAINTENANCE

Weather-resistant materials are used in the construction of the water motor alarm. At regular intervals, examine and test the water motor to ensure that the nozzle and drain line are clean and free of obstruction, and that the alarm functions properly. Also, at regular intervals and before disassembly of the water motor, clean and inspect the alarm line strainer located at the alarm outlet of the waterflow detecting device, or the outlet of the retard chamber, if used. (Note: Some retard chambers may be equipped with a strainer built in). For minimum maintenance and inspection requirements, refer to NFPA 25. In addition, the Authority Having Jurisdiction may have additional maintenance, testing, and inspection requirements that must be followed. Before proceeding with disassembly of the water motor alarm, notify the Authority Having Jurisdiction and occupants of the area covered by the system affected. Take all appropriate precautions. The water motor alarm will be disabled during disassembly.

A. Water Motor Disassembly (See Figure 3)

1. Isolate the water motor alarm by closing the alarm line valve in the trim of the waterflow detecting device. (Refer to appropriate technical data for the system used.)
2. Remove pipe plug (5).
3. Remove all round head machine screws (1) from the water motor cover.
4. Separate the cover (2) and the gasket (6) from the housing (3).
5. Remove the impeller (7).
6. Inspect and, if necessary, carefully clean the nozzle (4) with a wire or pipe cleaner brush.
7. Flush the nozzle way and drain line with water or compressed air.

B. Water Motor Re-Assembly

1. Re-install the pipe plug (5).
2. Re-install the impeller (7).
3. Replace cover gasket (6) and attach cover (2) by using round head machine screws (1).
4. Open the alarm line valve.
5. Test the water motor alarm.
6. When test is complete and water motor alarm operation is satisfactory, place the alarm line valve in the proper “alarm” position. Reset and return the affected systems to service.

7. AVAILABILITY

Viking Water Motor Alarms are available through a network of domestic and international distributors. See the Viking Corp. Web site for closest distributor or contact The Viking Corporation.

8. GUARANTEES

For details of warranty, refer to Viking’s current list price schedule or contact Viking directly.

TECHNICAL DATA

WATER MOTOR ALARMS

The Viking Corporation, 210 N Industrial Park Drive, Hastings MI 49058
Telephone: 269-945-9501 Technical Services: 877-384-5464 Fax: 269-818-1680 Email: techsvcs@vikingcorp.com

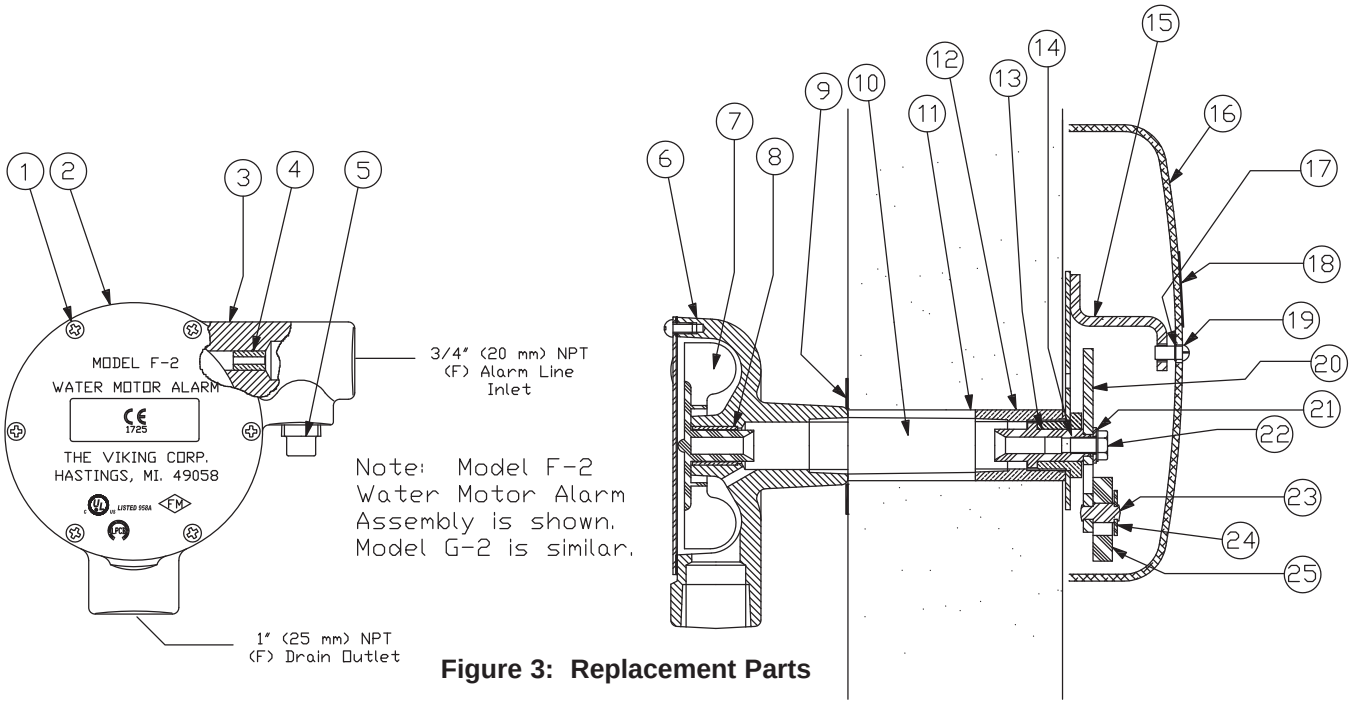

Figure 3: Replacement Parts

ITEM NO.	PART NUMBER F-2	PART NUMBER G-2	DESCRIPTION	MATERIAL	NO. REQ'D
1	*	*	Screw, R. H. Self-tap #10-24 x 3/8" lg.	Zinc Plated Steel	6
2	07867	07870	Cover	Steel	1
3	*	*	Housing	Cast Iron	1
4	*	*	Nozzle	Brass	1
5	01925S	01925S	1/2" Pipe Plug	Cast Iron	1
6	02550B	02550B	Cover Gasket	Cellulose/Nitrile/Glass Blend	1
7	02547C	02547C	Impeller	Delrin	1
8	*	*	Bearing	Brass: Sintered Bronze	1
9	05603A	05603A	Wall Plate	Galvanized Steel	1
10	05604B	05604B	Drive Shaft	Stainless Steel	1
11	--	--	3/4" Pipe (C.O.J.) not furnished	Galvanized Steel	1
12	*	*	Coupling	Brass	1
13	02556B	02556B	Striker Arm Shaft	Celcon Glass Filled	1
14	*	*	Bearing	Brass	1
15	*	*	Gong Support	Stainless Steel	1
16	05821C	06508C	Gong	Aluminum	1
17	02766A	02766A	Flat Washer, 11/32" ID x 11/16" ID x 1/16"	Stainless Steel	1
18	05768A	06505C	Gong Label	Aluminum (F-2), Vinyl (G-2)	1
19	--	--	Screw, B.H. Slotted, 5/16-18 x 1/2" lg.	Stainless Steel	1
20	*	*	Striker Arm	Stainless Steel	1
21	--	--	Flat Washer, 11/32" ID x 11/16" OD x 1/16"	Stainless Steel	1
22	--	--	Screw, H.H. Self-tap 5/16-18 x 1/2" lg.	Zinc Plated Steel	1
23	*	*	Striker Pin	Stainless Steel	1
24	*	*	Striker Arm Washer	Stainless Steel	1
25	*	*	Striker	Canvas Phenolic	1
--Indicates replacement part not available					
*Indicates replacement part only available in a Sub-Assembly listed below					
SUB-ASSEMBLIES					
1-8	07863	07869	Motor Assembly		
20, 23-25	02558B	02558B	Striker Arm Assembly		
12-15, 20-25	05606C	06506C	Support Assembly		