VIKING®

TECHNICAL DATA

STANDARD RESPONSE LARGE ORIFICE DRY PENDENT SPRINKLERS (8.0K)

(VK163, VK164, VK166)

The Viking Corporation, 210 N Industrial Park Drive, Hastings MI 49058
Telephone: 269-945-9501 Technical Services: 877-384-5464 Fax: 269-818-1680 Email: techsvcs@vikingcorp.com

1. DESCRIPTION

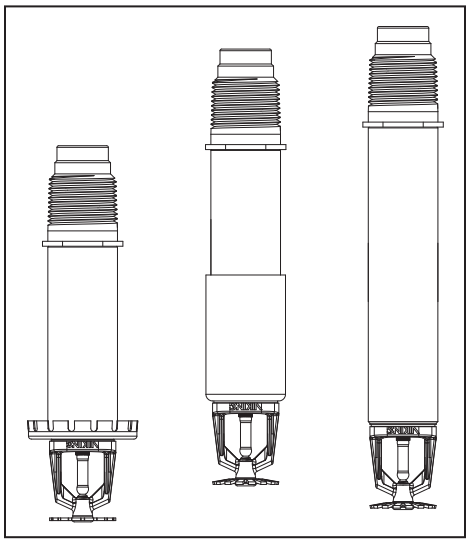

Viking Standard Response Large Orifice Dry Pendent Sprinklers are thermosensitive spray sprinklers suitable for use in areas subject to freezing. The sprinklers are designed for dry systems and preaction systems where it is necessary to prevent water or condensation from entering the drop nipple before sprinkler operation. They may also be installed in spaces subject to freezing and supplied from a wet system in an adjacent heated area. Large orifice dry pendent sprinklers allow greater flows at lower pressures than standard orifice sprinklers.

Viking Standard Response Large Orifice Dry Pendent Sprinklers are available in various finishes and temperature ratings to meet design requirements. The special Polyester and Electroless Nickel PTFE (ENT) coatings have been investigated for installation in corrosive atmospheres and are listed as corrosion resistant as indicated in the Approval Chart.

NOTE: When installed in some corrosive environments, the Polyester finish may change color. This natural discoloration over time is not in itself an indication of corrosion and should not be treated as such. All sprinklers installed in corrosive environments should be replaced or tested as described in NFPA 25 on a more frequent basis.

2. LISTINGS AND APPROVALS

c UL us **cULus Listed:** Category VNIV
NYC Approved: MEA 89-92-E, Volume 37
Refer to the Approval Chart and Design Criteria on page 101r for cULus Listing requirements that must be followed.

3. TECHNICAL DATA

Specifications:
Available since 1991.
Minimum Operating Pressure: 7 psi (0.5 bar)
Maximum Working Pressure: 175 psi (12 bar). Factory tested pneumatically to 100 psi (6.89 bar)
Thread size: 1” NPT or 25 mm BSP
Nominal K-Factor: 8.0 U.S. (115.2 metric*) for lengths up to 48”.
Glass-bulb fluid temperature rated to -65 °F (-55 °C)
Covered by the following U.S. Patents: 8,636,075

*Metric K-factor measurement shown is when pressure is measured in bar. When pressure is measured in kPa, divide the metric K-factor shown by 10.0.

Material Standards:
Frame Casting: Brass UNS-C84400
Deflector: Brass UNS-C23000
Bulb: Glass, nominal 5 mm diameter
Belleville Spring Sealing Assembly: Nickel Alloy, coated on both sides with PTFE Tape
Compression Screw: Brass UNS-C36000
Pip Cap: Brass UNS-C31400 or UNS-C31600
Pip Cap Adapter: Brass UNS-C36000
Orifice: Copper UNS-C11000 or UNS-C21000
Tube: ERW Hydraulic Steel Tube
Inlet and Barrel End: QM Brass or Brass UNS-C31400 or Brass UNS-C31600
Support (Internal): Brass UNS-C36000 or Brass UNS-C31400 or Brass UNS-C31600
Barrel: Steel Pipe UNS-G10260, Electrodeposited Epoxy Base finish
Sleeve (for Adjustable Standard style only): Brass UNS-C26000 or UNS-C26800

Viking Technical Data may be found on The Viking Corporation’s Web site at http://www.vikinggroupinc.com. The Web site may include a more recent edition of this Technical Data Page.

Escutcheon Materials:
Adjustable Standard Dry Escutcheons: Brass UNS-C26000 or UNS-C26800
Recessed Dry Escutcheons: Cold Rolled Steel UNS-G10080
ENT Coated Adjustable and Recessed Escutcheons: Stainless Steel UNS-S30400

Ordering Information: (Also refer to the current Viking price list.)
Order Standard Response Large Orifice Dry Pendent Sprinklers by first adding the appropriate suffix for the sprinkler finish, the appropriate suffix for the temperature rating, and then the suffix for the length (“A” dimension) to the sprinkler base part number.

VIKING®

TECHNICAL DATA

STANDARD RESPONSE LARGE ORIFICE DRY PENDENT SPRINKLERS (8.0K)

(VK163, VK164, VK166)

The Viking Corporation, 210 N Industrial Park Drive, Hastings MI 49058
Telephone: 269-945-9501 Technical Services: 877-384-5464 Fax: 269-818-1680 Email: techsvcs@vikingcorp.com

Order in a specific length noted as the "A" dimension (see Figures 3 through 5). The "A" dimension is the distance from the face of the fitting (tee) to the desired finished surface of the ceiling.

These sprinklers are listed in lengths from 1-1/2" to 45-1/2" (38.1 to 1,156 mm) for the adjustable standard style, 3" to 47" (76.2 to 1,194 mm) for the plain barrel style, and 3-1/4" to 47-1/2" (82.5 to 1,207 mm) for the adjustable recessed style.

Lengths exceeding the standard lengths are available, with no approvals, on a "made-to-order" basis: Recessed Dry Pendent up 64-1/4" (1,632 mm). Adjustable Standard Dry Pendent up to 62" (1,575 mm). Plain Barrel Dry Pendent up to 64" (1,626 mm). Contact the manufacturer for more information.

Finish Suffix: Brass = A, Chrome = F, White Polyester = M-/W, and ENT = JN

Temperature Suffix: 155 °F (68 °C) = B, 175 °F (79 °C) = D, 200 °F (93 °C) = E, 286 °F (141 °C) = G

For example, sprinkler VK163 with 1" NPT Threads, a Chrome finish, 155 °F (68 °C) temperature rating, and "A" length of 10" = Part No. 12810UFB10.

Available Finishes And Temperature Ratings:

Refer to Table 1.

Accessories: (Also refer to the "Sprinkler Accessories" section of the Viking data book.)

Sprinkler Wrenches:

A. Standard Wrench: Part No. 07297W/B (available since 1991)

B. Wrench for recessed sprinklers: Part No. 07565W/B† (available since 1991)
†A ½" ratchet is required (not available from Viking).

Sprinkler Guard: Chrome, with no listings or approvals, for installation on dry pendent sprinklers manufactured after May 1994 only (Part No. 08954).

Replacement Escutcheons:

A. Adjustable Standard Dry Escutcheon: Base Part No. 07741

B. Recessed Dry Escutcheon Cup: Base Part No. 05459A

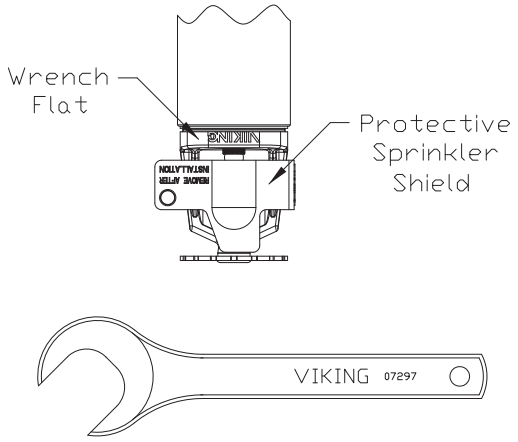

Figure 1: **Standard Sprinkler Wrench 07297W/B**

4. INSTALLATION

Refer to appropriate NFPA Installation Standards.

5. OPERATION

During fire conditions, the heat-sensitive liquid in the glass bulb expands, causing the glass to shatter, releasing the internal parts to open the waterway. Water flowing through the sprinkler orifice strikes the sprinkler deflector, forming a uniform spray pattern to extinguish or control the fire.

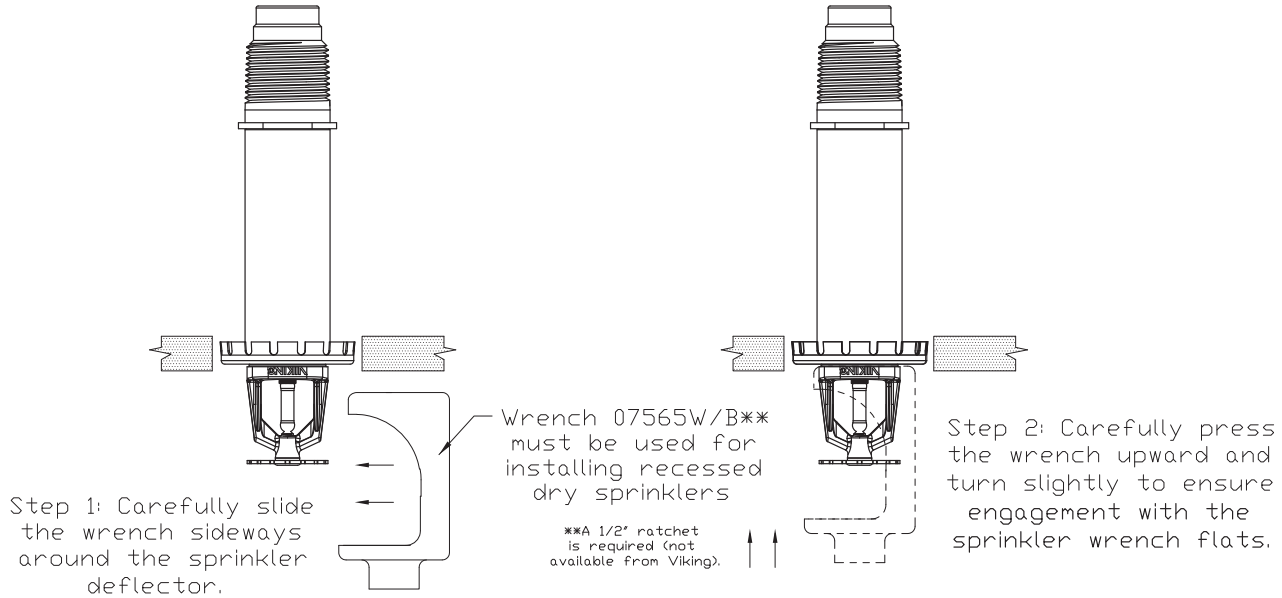

Figure 2: **Wrench 07565W/B for Adjustable Recessed Dry Pendent Sprinklers**

VIKING®	TECHNICAL DATA	STANDARD RESPONSE LARGE ORIFICE DRY PENDENT SPRINKLERS (8.0K) (VK163, VK164, VK166)

The Viking Corporation, 210 N Industrial Park Drive, Hastings MI 49058
Telephone: 269-945-9501 Technical Services: 877-384-5464 Fax: 269-818-1680 Email: techsvcs@vikingcorp.com

TABLE 1: AVAILABLE SPRINKLER TEMPERATURE RATINGS AND FINISHES

Sprinkler Temperature Classification	Sprinkler Nominal Temperature Rating[1]	Maximum Ambient Ceiling Temperature[2]	Bulb Color
Ordinary	155 °F (68 °C)	100 °F (38 °C)	Red
Intermediate	175 °F (79 °C)	150 °F (65 °C)	Yellow
Intermediate	200 °F (93 °C)	150 °F (65 °C)	Green
High	286 °F (141 °C)	225 °F (107 °C)	Blue

Sprinkler Finishes: Brass, Chrome, White Polyester, and ENT
Corrosion-Resistant Coating[3,4]: White Polyester and ENT in all temperature ratings

Footnotes

[1] The sprinkler temperature rating is stamped on the deflector.

[2] Based on NFPA-13. Other limits may apply, depending on fire loading, sprinkler location, and other requirements of the Authority Having Jurisdiction. Refer to specific installation standards.

[3] **The corrosion-resistant Polyester and ENT coatings have passed the standard corrosion test required by the approving agencies indicated in the Approval Charts. These tests cannot and do not represent all possible corrosive environments. Note: These coatings are NOT corrosion proof. Prior to installation, verify through the end-user that the coatings are compatible with or suitable for the proposed environment. Polyester and ENT coatings are applied to the exposed exterior surfaces only. Note that the spring is exposed on sprinklers with Polyester and ENT coatings.**

[4] **When installed in some corrosive environments, the Polyester finish may change color. This natural discoloration over time is not in itself an indication of corrosion and should not be treated as such. All sprinklers installed in corrosive environments should be replaced or tested as described in NFPA 25 on a more frequent basis.**

6. INSPECTIONS, TESTS, AND MAINTENANCE

Refer to NFPA 25 for Inspection, Testing and Maintenance requirements.

7. AVAILABILITY

The Viking Standard Response Dry Pendent Sprinkler is available through a network of domestic and international distributors. See The Viking Corporation web site for the closest distributor or contact The Viking Corporation.

8. GUARANTEE

For details of warranty, refer to Viking's current list price schedule or contact Viking directly.

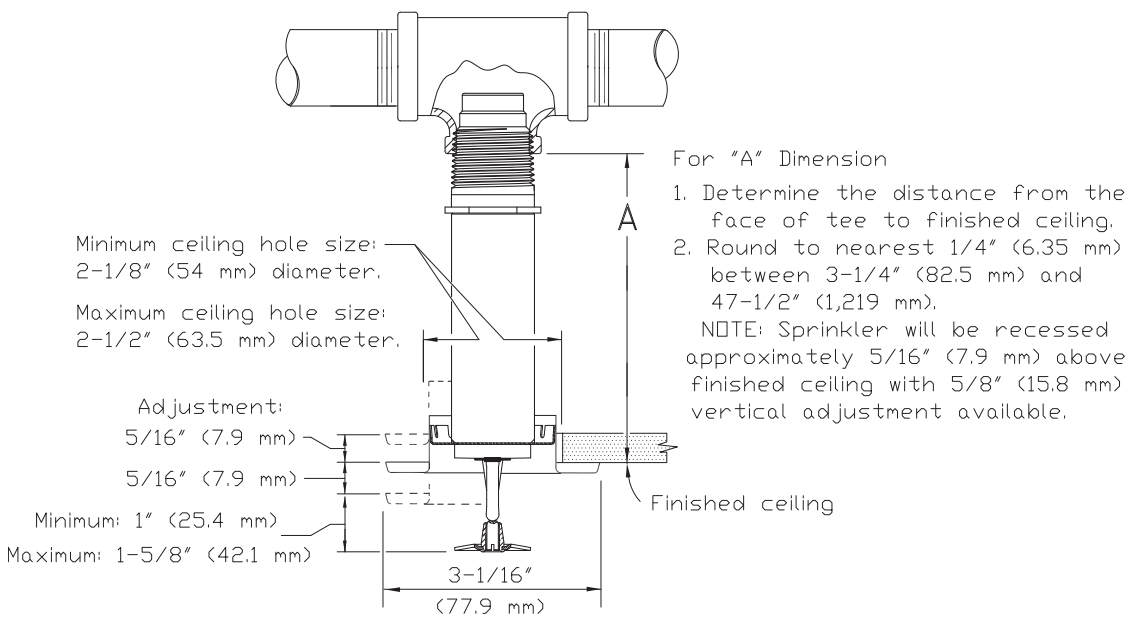

Figure 3: Adjustable Recessed Dry Pendent Sprinkler

VIKING®

TECHNICAL DATA

STANDARD RESPONSE LARGE ORIFICE DRY PENDENT SPRINKLERS (8.0K)

(VK163, VK164, VK166)

The Viking Corporation, 210 N Industrial Park Drive, Hastings MI 49058
Telephone: 269-945-9501 Technical Services: 877-384-5464 Fax: 269-818-1680 Email: techsvcs@vikingcorp.com

Approval Chart

Standard Response Large Orifice Dry Pendent Sprinklers (8.0K)
Maximum 175 PSI (12 bar) WWP

KEY: A1X — Temperature, Finish, Escutcheon (if applicable)

Sprinkler Base Part No.[1]	SIN	Style	Thread Size		Nominal K-Factor[2]	Order Length Increment		Listings and Approvals[4] (Refer also to Design Criteria below.)					
			NPT	BSP		Inches	mm	cULus[5]	NYC[6]	VdS	LPCB	CE	
12810U	VK163	Adjustable Standard	1”	--	8.0 U.S. (115.2 metric[3])	1/2”	12.7	A1	A2	--	--	--	--
12813U			--	25 mm		1/2”	12.7	A1	--	--	--	--	--
12811U	VK164	Adjustable Recessed	1”	--		1/4”	6.35	B3, B6	B3	--	--	--	--
12814U			--	25 mm		1/4”	6.35	B3, B6	--	--	--	--	--
12741U	VK166	Plain Barrel	1”	--		1/2”	12.7	A4	A5	--	--	--	--
12812U			--	25 mm		1/2”	12.7	A4	--	--	--	--	--

Approved Temperature Ratings

A - 155 °F (68 °C), 175 °F (79°C), 200 °F (93 °C), and 286 °F (141 °C)
B - 155 °F (68 °C), 175 °F (79°C), and 200 °F (93 °C)

Approved Finishes and “A” Dimensions

1 - Chrome, White Polyester[9], and ENT[9] sprinkler with a Chrome, White Polyester[9], and ENT[9] Sleeve and Escutcheon with “A” dimensions 1-1/2” to 45-1/2” (38.1 mm to 1,156 mm)
2 - Chrome or White Polyester sprinkler with a Chrome Sleeve and Escutcheon with “A” dimensions 1-1/2” to 45-1/2” (38.1 mm to 1,156 mm)
3 - Chrome or White Polyester[9] with “A” dimensions 3-1/4” to 47-1/2” (82.5 to 1,207 mm)
4 - Chrome, White Polyester[9], Brass, and ENT[9] with “A” dimensions 3” to 47” (76.2 to 1,194 mm)
5 - Chrome or Brass with “A” dimensions 3” to 47” (76.2 mm to 1,194 mm)
6 - ENT[9] with “A” dimensions 3-1/4” to 47-1/2” (82.5 to 1,207 mm)

Footnotes

[1] Part number shown is the base part number. For complete part number, refer to current Viking price list schedule.
[2] K-Factor applies for standard lengths (“A” Dimensions indicated above).
[3] Metric K-factor measurement shown is when pressure is measured in Bar. When pressure is measured in kPa, divide the metric K-factor shown by 10.0.
[4] This chart shows the listings and approvals available at the time of printing. Other approvals may be in process. Check with the manufacturer for any additional approvals.
[5] Listed by Underwriter’s Laboratories for use in the U.S. and Canada.
[6] Accepted for use, City of New York Department of Buildings, MEA 89-92-E, Vol. 37.
[9] cULus Listed as corrosion resistant.

DESIGN CRITERIA

(Also refer to the Approval Chart above.)

NOTE: When using CPVC fittings with Viking dry sprinklers, use only new Nibco Model 5012-S-BI tees. When selecting other CPVC fittings, contact Viking Technical Services.

cULus Listing Requirements:

Standard Dry Pendent Sprinklers are cULus Listed as indicated in the Approval Chart for installation in accordance with the latest edition of NFPA 13 for standard spray pendent sprinklers.

- Designed for use in Light, Ordinary, and Extra Hazard occupancies.
- Protection areas and maximum spacing shall be in accordance with the tables provided in NFPA 13.
- Minimum spacing allowed is 6 ft. (1.8 m) unless baffles are installed in accordance with NFPA 13.
- Locate no less than 4” (102 mm) from walls.
- Maximum distance from walls shall be no more than one-half of the allowable distance between sprinklers. The distance shall be measured perpendicular to the wall.
- The sprinkler installation and obstruction rules contained in NFPA 13 for standard spray pendent sprinklers must be followed.

IMPORTANT: Always refer to Bulletin Form No. F_091699 - Care and Handling of Sprinklers. Also refer to page DRY1-3 for general care, installation, and maintenance information. Viking sprinklers are to be installed in accordance with the latest edition of Viking technical data, the appropriate standards of NFPA, LPCB, APSAD, VdS or other similar organizations, and also with the provisions of governmental codes, ordinances, and standards, whenever applicable.

TECHNICAL DATA

STANDARD RESPONSE LARGE ORIFICE DRY PENDENT SPRINKLERS (8.0K)

(VK163, VK164, VK166)

The Viking Corporation, 210 N Industrial Park Drive, Hastings MI 49058
Telephone: 269-945-9501 Technical Services: 877-384-5464 Fax: 269-818-1680 Email: techsvcs@vikingcorp.com

For "A" Dimension: 1. Determine the distance from the face of the tee to the finished ceiling.
2. Round to the nearest 1/2" (12.7 mm) between 1-1/2" and 45-1/2" (38.1 mm and 1,156 mm).
NOTE: The deflector will be located approximately 3-7/16" (87.3 mm) below the ceiling, with 1" (25.4 mm) upward and 1" (25.4 mm) downward adjustment.

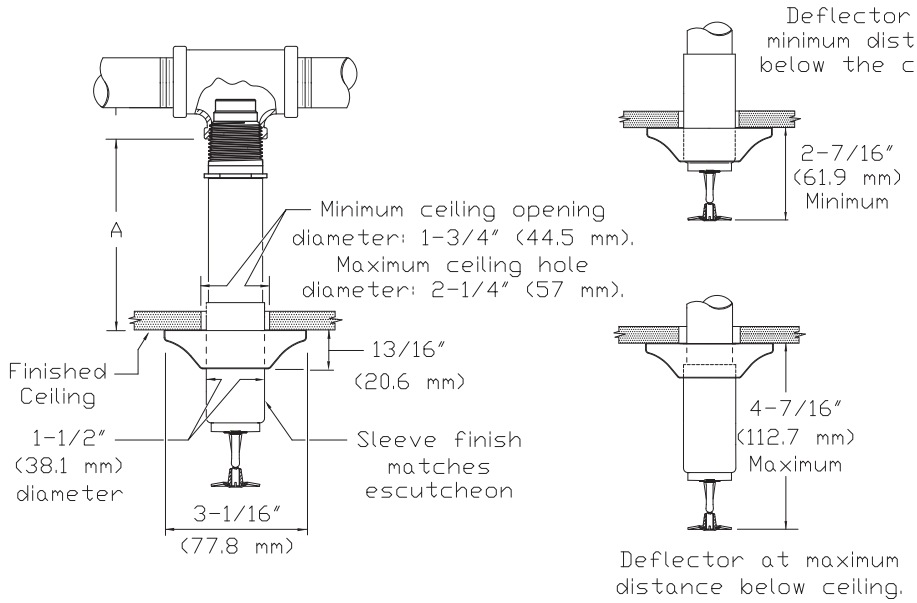

NOTE: To locate the deflector at the minimum distance below the ceiling, with no upward adjustment available, order the dry pendent sprinkler 1" (25.4 mm) shorter than the A dimension.

NOTE: To locate the deflector at the maximum distance below the ceiling, with no downward adjustment available, order the dry pendent sprinkler 1" (25.4 mm) longer than the A dimension.

Figure 4: **Adjustable Standard Dry Pendent Sprinkler**

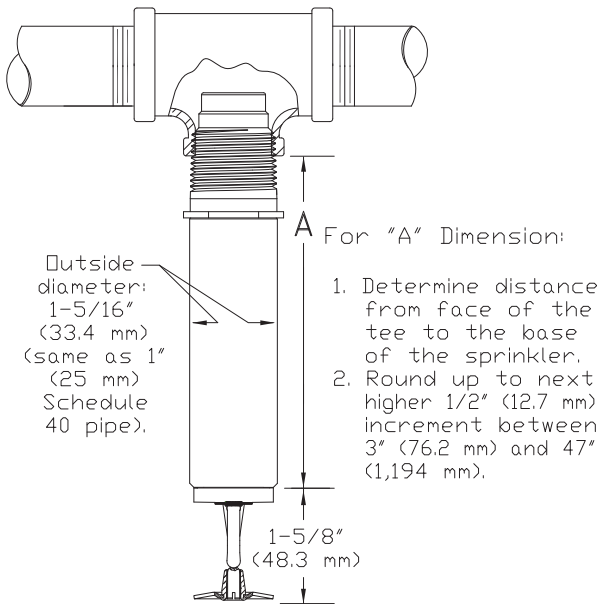

For "A" Dimension:

1. Determine distance from face of the tee to the base of the sprinkler.
2. Round up to next higher 1/2" (12.7 mm) increment between 3" (76.2 mm) and 47" (1,194 mm).

Figure 5: **Plain Barrel Dry Pendent Sprinkler**

TECHNICAL DATA

STANDARD RESPONSE LARGE ORIFICE DRY PENDENT SPRINKLERS (8.0K)

(VK163, VK164, VK166)

The Viking Corporation, 210 N Industrial Park Drive, Hastings MI 49058
Telephone: 269-945-9501 Technical Services: 877-384-5464 Fax: 269-818-1680 Email: techsvcs@vikingcorp.com

Ambient Temperature of Protected Area* at the Discharge End of the Sprinkler	Exposed Barrel Ambient Temperature 40°F/4°C	50°F/10°C	60°F/16°C
	Exposed Minimum Barrel Lengths** Face of Tee to Top of Ceiling In. (mm)	In. (mm)	In. (mm)
40°F (4°C)	0	0	0
30°F (-1°C)	0	0	0
20°F (-7°C)	4 (100)	0	0
10°F (-12°C)	8 (203)	1 (25.4)	0
0°F (-18°C)	12 (305)	3 (76)	0
-10°F (-23°C)	14 (356)	4 (102)	1 (25.4)
-20°F (-29°C)	14 (356)	6 (152)	3 (76)
-30°F (-34°C)	16 (406)	8 (203)	4 (102)
-40°F (-40°C)	18 (457)	8 (203)	4 (102)
-50°F (-46°C)	20 (508)	10 (254)	6 (152)
-60°F (-51°C)	20 (508)	10 (254)	6 (152)

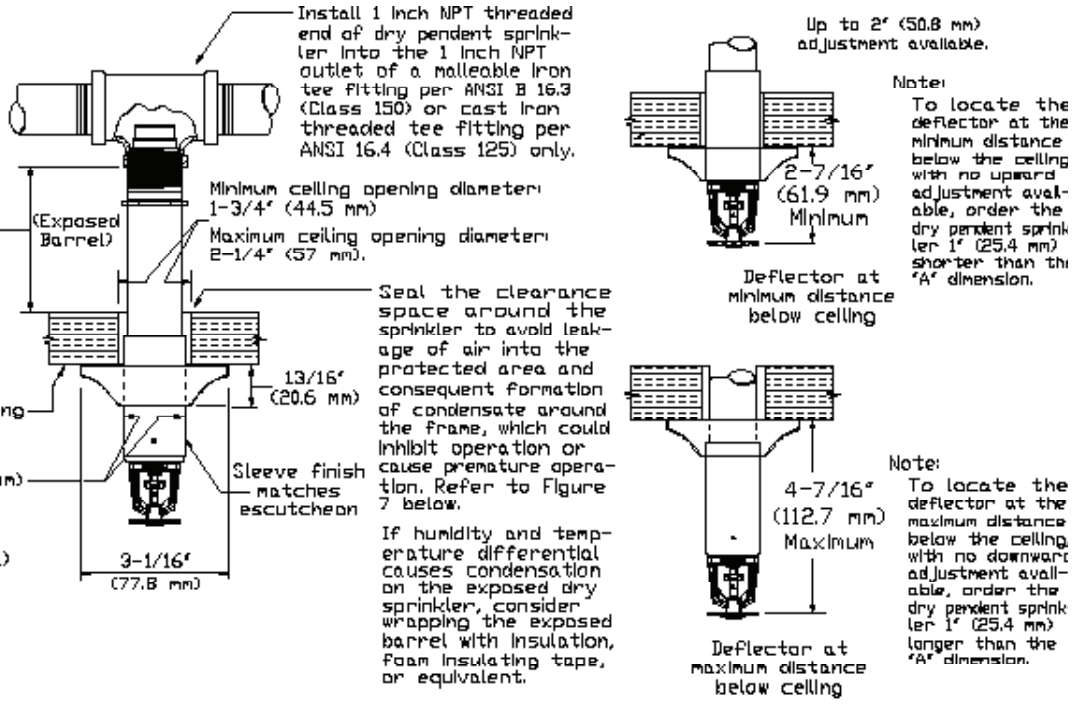

*The protected area refers to the area below the ceiling.
The ambient temperature is the temperature at the discharge end of the sprinkler.
For protected area temperatures that occur between the values listed, use the next cooler temperature.

**The minimum required barrel length is not the same as the "A" dimension. Refer to Figures 3-5 for the "A" dimension.
NOTE: Exposed minimum barrel lengths are inclusive up to 30 mph wind velocities.

Figure 6: **Dry Pendent Sprinkler Required Minimum Barrel Length Based on Ambient Temperature in the Protected Area (Adjustable Standard Dry Pendent Sprinkler is shown)**

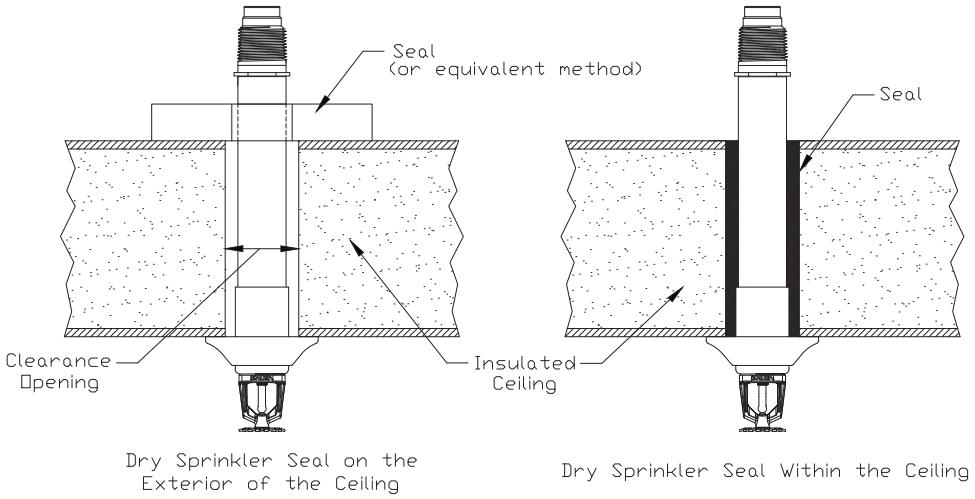

Figure 7: **Dry Sprinkler Seal (Adjustable Standard Dry Pendent Sprinkler is Shown)**