VIKING

TECHNICAL DATA

QUICK RESPONSE DRY CONCEALED PENDENT SPRINKLER VK194

The Viking Corporation, 210 N Industrial Park Drive, Hastings MI 49058
Telephone: 269-945-9501 Technical Services: 877-384-5464 Fax: 269-818-1680 Email: techsvcs@vikingcorp.com

1. DESCRIPTION

Viking Quick Response Dry Concealed Pendent Sprinklers are thermosensitive spray sprinklers suitable for use in areas subject to freezing. The sprinklers are designed for dry systems and preaction systems where it is necessary to prevent water or condensation from entering the drop nipple before sprinkler operation. They may also be installed in spaces subject to freezing and supplied from a wet system in an adjacent heated area.

The dry concealed sprinkler is pre-assembled with a threaded adapter for installation with the domed cover that provides up to ½" (12.7 mm) of vertical adjustment. The push-on, thread-off cover slips on from below the ceiling to allow installation of the sprinkler prior to ceiling construction.

Viking Quick Response Dry Concealed Pendent Sprinklers are available in various finishes and temperature ratings to meet design requirements.

2. LISTINGS AND APPROVALS

cULus Listed: Category VNIV
NYC Approved: MEA 89-92-E, Volume 37

Refer to the Approval Chart on page 4 and Design Criteria on page 5 for cULus Listing requirements that must be followed.

NOTE: Dry concealed sprinklers are NOT for use in freezers or with the dry sprinkler seal.

3. TECHNICAL DATA

Specifications:
Minimum Operating Pressure: 7 psi (0.5 bar)
Maximum Working Pressure: 175 psi (12 bar). Factory tested pneumatically to 95 psi (6.55 bar)
Thread size: 1" NPT or 25 mm BSP
Nominal K-Factor: 5.6 U.S. (80.6 metric*) for all listed and approved lengths.

* Metric K-factor measurement shown is when pressure is measured in Bar. When pressure is measured in kPa, divide the metric K-factor shown by 10.0.

Glass-bulb fluid temperature rated to -65 °F (-55 °C)
Covered by the following U.S. Patents: 8,636,075

Material Standards:
Frame Casting: Brass UNS-C84400
Deflector: Brass UNS-C26000
Bulb: Glass, nominal 3 mm diameter
Belleville Spring Sealing Assembly: Nickel Alloy, coated on both sides with Teflon Tape
Compression Screw: Brass UNS-C36000
Pip Cap: Brass UNS-C31600, or Pip Cap and Insert Assembly: Copper UNS-C11000 and Stainless Steel UNS-S30400
Orifice: Copper UNS-C22000
Tube: ERW Hydraulic Steel Tube
Support (Internal): Stainless Steel UNS-S30400
Barrel: Steel Pipe UNS-G10260, Electrodeposited Epoxy Base finish
Barrel End and Threads: QM Brass
Cover Adapter: Cold Rolled Steel UNS-G10080, Finish: Clear Chromate over Zinc Plating

Viking Technical Data may be found on The Viking Corporation's Web site at http://www.vikinggroupinc.com. The Web site may include a more recent edition of this Technical Data Page.

Cover Assembly Materials:
Cover Plate Assembly: Copper UNS-C11000 and Brass UNS-C26800
Spring: Beryllium Nickel
Solder: Eutectic

Ordering Information: (Also refer to the current Viking price list.)
Viking Quick Response Dry Concealed Pendent Sprinklers and Cover Plate Assemblies must be ordered separately.

The Viking Corporation, 210 N Industrial Park Drive, Hastings MI 49058
Telephone: 269-945-9501 Technical Services: 877-384-5464 Fax: 269-818-1680 Email: techsvcs@vikingcorp.com

Order the sprinkler assembly (includes sprinkler and adapter pre-assembled, with a protective plastic cap covering the unit) by adding the appropriate suffix for the sprinkler temperature rating, and then the suffix for the length ("A" dimension) to sprinkler base part number (Order in a specific length noted as the "A" dimension (see Figure 4).

The "A" dimension is the distance from the face of the fitting (tee) to the desired finished surface of the ceiling. These sprinklers are listed and approved in lengths from 4" to 48-1/4" (102 mm to 1,226 mm).

Lengths exceeding the standard length are available, with no approvals, on a "made-to-order" basis up to 65-1/4" (1,657 mm). Contact the manufacturer for more information.

Temperature Suffix: 155 °F (68 °C) = B, 175 °F (79 °C) = D, 200 °F (93 °C) = E

For example, sprinkler VK194 with with 1" NPT Threads, a 155 °F (68 °C) temperature rating, and "A" length of 10" = Part No. 12422UAB10.

Cover Plate Assembly: Base Part No. 12381

Specify finish and temperature rating of the cover plate assembly by adding the appropriate suffixes for the finish and the cover temperature rating to the base part number:

Finish Suffix: Polished Chrome = F, Painted White = M-/W, Painted Ivory = M-/I, Painted Black = M-/B

Temperature Suffix: 135 °F (57 °C) = A , 165 °F (74 °C) = C

For example, cover 12381 with a Polished Chrome finish and a 135 °F (57 °C) temperature rating = 12381FA.

Available Finishes And Temperature Ratings:

Refer to Table 1.

Accessories: (Also refer to the "Sprinkler Accessories" section of the Viking data book.)

Sprinkler Wrenches:

Part No. 07565W/B** (available since 1991)

**A ½" ratchet is required (not available from Viking).

4. INSTALLATION

Refer to appropriate NFPA Installation Standards. Concealed dry sprinklers are NOT recommended for freezers or cold storage applications that require sealing methods which could interfere with air flow through the sprinkler cover plate and body.

5. OPERATION

During fire conditions, when the temperature around the sprinkler approaches its operating temperature, the cover plate detaches. Continued heating of the exposed sprinkler causes the heat-sensitive liquid in the glass bulb to expand and the bulb to shatter, releasing the internal parts to open the waterway. Water flowing through the sprinkler orifice strikes the sprinkler deflector, forming a uniform spray pattern to extinguish or control the fire.

6. INSPECTIONS, TESTS AND MAINTENANCE

Refer to NFPA 25 for Inspection, Testing and Maintenance requirements.

7. AVAILABILITY

The Viking Quick Response Dry Concealed Pendent Sprinkler is available through a network of domestic and international distributors. See The Viking Corporation web site for the closest distributor or contact The Viking Corporation.

8. GUARANTEE

For details of warranty, refer to Viking's current list price schedule or contact Viking directly.

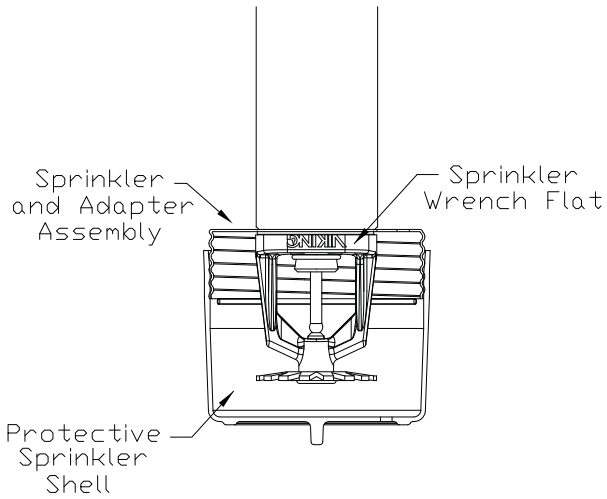

Figure 1:
Concealed Dry Sprinkler with Protective Shell

VIKING	TECHNICAL DATA	QUICK RESPONSE DRY CONCEALED PENDENT SPRINKLER VK194

The Viking Corporation, 210 N Industrial Park Drive, Hastings MI 49058
Telephone: 269-945-9501 Technical Services: 877-384-5464 Fax: 269-818-1680 Email: techsvcs@vikingcorp.com

TABLE 1: AVAILABLE SPRINKLER TEMPERATURE RATINGS AND FINISHES

Sprinkler Temperature Classification	Sprinkler Nominal Temperature Rating[1]	Maximum Ambient Ceiling Temperature[2]	Temperature Rating of the Cover Assembly (Required)[4]	Cover Plate Base Part Number[3]	Bulb Color
Ordinary	155 °F (68 °C)	100 °F (38 °C)	135 °F (57 °C)	12381	Red
Intermediate	175 °F (79 °C)	150 °F (65 °C)	165 °F (74 °C)	12381	Yellow
Intermediate	200 °F (93 °C)	150 °F (65 °C)	165 °F (74 °C)	12381	Green

Cover Plate Finishes: Polished Chrome, Painted White, Painted Ivory, or Painted Black

Footnotes

[1] The sprinkler temperature rating is stamped on the deflector.

[2] Based on NFPA-13. Other limits may apply, depending on fire loading, sprinkler location, and other requirements of the Authority Having Jurisdiction. Refer to specific installation standards.

[3] Part number shown is the base part number. For complete part number, refer to current Viking price list schedule.

[4] **The 135 °F (57 °C) cover has an orange label. The 165 °F (74 °C) cover has a white label.**

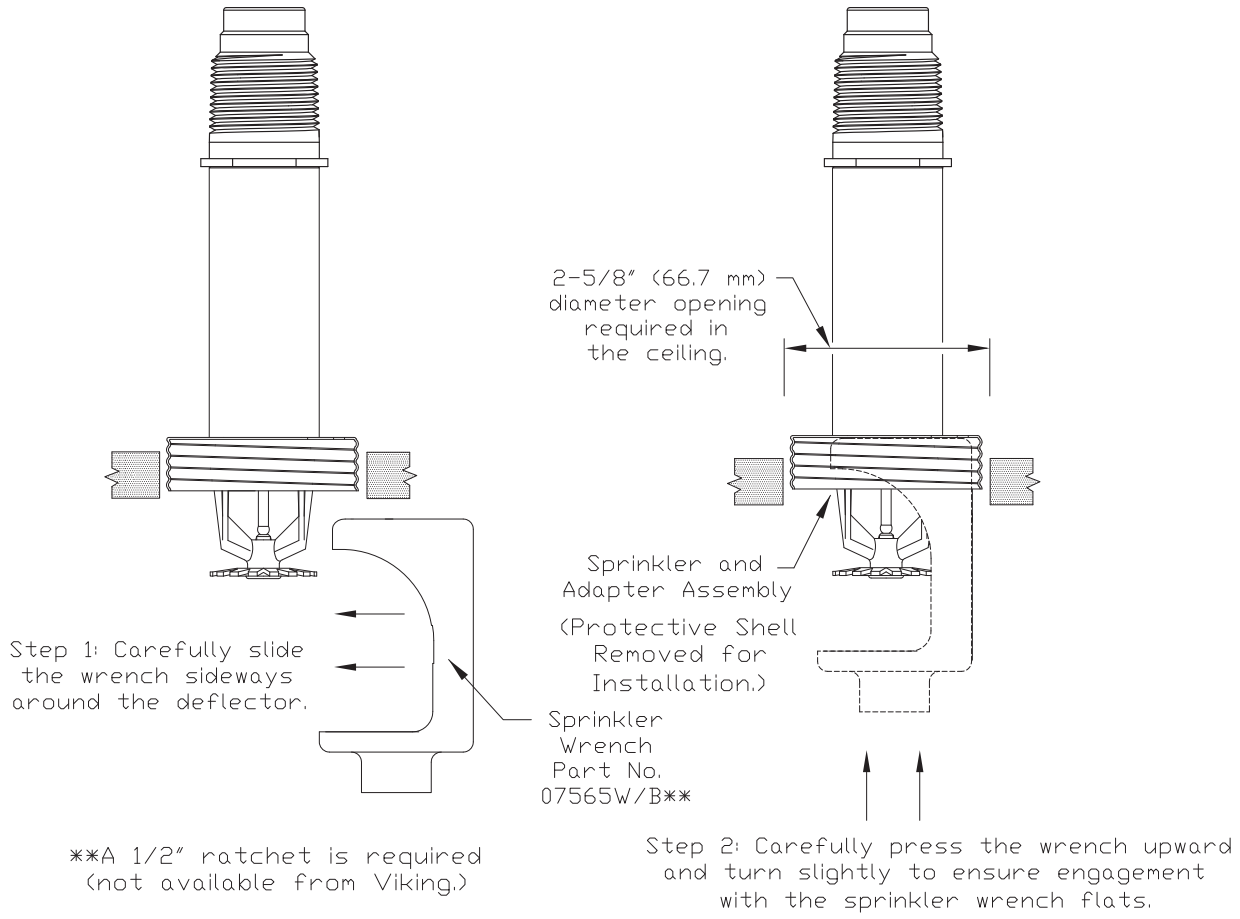

Figure 2: **Sprinkler Installation and Correct Use of Sprinkler Wrench 07565W/B**

VIKING	TECHNICAL DATA	QUICK RESPONSE DRY CONCEALED PENDENT SPRINKLER VK194

The Viking Corporation, 210 N Industrial Park Drive, Hastings MI 49058
Telephone: 269-945-9501 Technical Services: 877-384-5464 Fax: 269-818-1680 Email: techsvcs@vikingcorp.com

Approval Chart

Quick Response Dry Concealed Pendent Sprinklers
Maximum 175 PSI (12 bar) WWP

Sprinkler Temperature Rating
Cover Plate Temperature Rating
AW1 Cover Plate Finish KEY

Sprinkler Base Part Number[1]	SIN	Thread Size		Nominal K-Factor[2]		Order Length Increment		Listings and Approvals[4] (Refer also to Design Criteria on page 104n.)						
		NPT	BSP	U.S.	metric[3]	Inches	mm	cULus[5]	FM	NYC[6]	VdS	LPCB	CE	
12422UA	VK194	1”	--	5.6	80.6	1/4”	6.35	AW1, BX1	--	AW1, BX1	--	--	--	--
12430UA	VK194	--	25 mm	5.6	80.6	1/4”	6.35	AW1, BX1	--	AW1, BX1	--	--	--	--

Sprinkler Temperature Ratings	Cover Plate Temperature Ratings	Cover Plate Finishes
A - 155 °F (68 °C) B - 175 °F (79 °C) and 200 °F (93 °C)	W - 135 °F (57 °C) X - 165 °F (74 °C)	1 - Polished Chrome, Painted White, Painted Ivory, and Painted Black[7]

Footnotes

[1] Part number shown is the base part number. For complete part number, refer to current Viking price list schedule.

[2] K-Factor applies for standard lengths (“A” Dimensions indicated above).

[3] Metric K-factor measurement shown is when pressure is measured in Bar. When pressure is measured in kPa, divide the metric K-factor shown by 10.0.

[4] This chart shows the listings and approvals available at the time of printing. Other approvals may be in process. Check with the manufacturer for any additional approvals.

[5] Listed by Underwriter’s Laboratories for use in the U.S. and Canada.

[6] Accepted for use, City of New York Department of Buildings, MEA 89-92-E, Vol. 37.

[7] Other paint colors are available on request with the same listings as the standard finish colors. Listings and approvals apply for any paint manufacturer. Contact Viking for additional information. Custom colors are indicated on a label inside the cover assembly. Refer to Figure 3.

Identification of Custom Paint Color:
All custom color painted cover plates will have an identifying label affixed to the inside of the cover that indicates custom color and will have a representative sample (a paint dot) of the paint on the label.

Figure 3: Identification of Custom Paint Color for Concealed Covers

VIKING	TECHNICAL DATA	QUICK RESPONSE DRY CONCEALED PENDENT SPRINKLER VK194

The Viking Corporation, 210 N Industrial Park Drive, Hastings MI 49058
Telephone: 269-945-9501 Technical Services: 877-384-5464 Fax: 269-818-1680 Email: techsvcs@vikingcorp.com

DESIGN CRITERIA

(Also refer to the Approval Chart on page 104m.)

NOTE: When using CPVC fittings with Viking dry sprinklers, use only new Nibco Model 5012-S-Bl tees. When selecting other CPVC fittings, contact Viking Technical Services.

cULus Listing Requirements:

Quick Response Dry Pendent Sprinklers are cULus Listed as indicated in the Approval Chart for installation in accordance with the latest edition of NFPA 13 for standard spray pendent sprinklers.

- Designed for use in Light and Ordinary Hazard occupancies.
- Protection areas and maximum spacing shall be in accordance with the tables provided in NFPA 13.
- Minimum spacing allowed is 6 ft. (1.8 m) unless baffles are installed in accordance with NFPA 13.
- Locate no less than 4” (102 mm) from walls.
- Maximum distance from walls shall be no more than one-half of the allowable distance between sprinklers. The distance shall be measured perpendicular to the wall.
- The sprinkler installation and obstruction rules contained in NFPA 13 for standard spray pendent sprinklers must be followed.
- **DEFLECTOR POSITION:** Install Dry Concealed Pendent Sprinklers with the deflector 3/8” (9.5 mm) to 7/8” (22.2 mm) below the ceiling. Refer to Figure 4.

NOTES: Concealed sprinklers must be installed in neutral or negative pressure plenums only.

Dry concealed sprinklers are NOT for use in freezers or with the dry sprinkler seal.

IMPORTANT: Always refer to Bulletin Form No. F_091699 - Care and Handling of Sprinklers. Also refer to page DRY1-3 for general care, installation, and maintenance information. Viking sprinklers are to be installed in accordance with the latest edition of Viking technical data, the appropriate standards of NFPA, FM Global, LPCB, APSAD, VdS or other similar organizations, and also with the provisions of governmental codes, ordinances, and standards, whenever applicable.

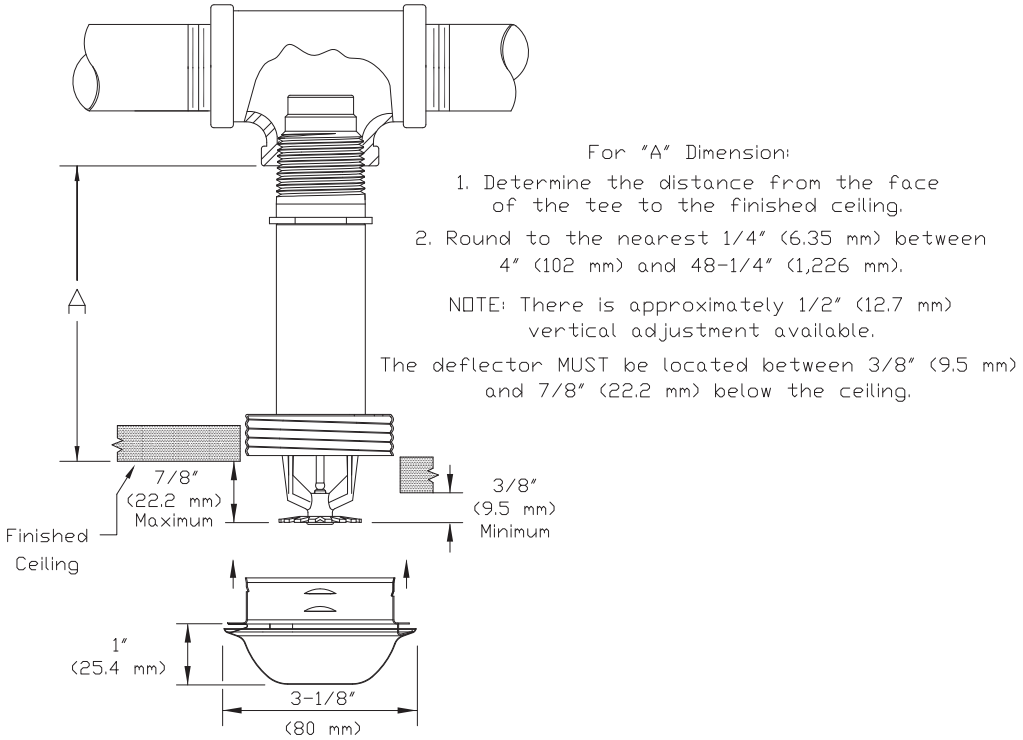

Figure 4: Dry Concealed Pendent Sprinkler with up to 1/2” (12.7 mm) Adjustment.